SAVREMENI PRISTUP PROJEKTOVANJU UNIVERZALNOG RADIOGRAFSKOG SISTEMA PODRŽAN RAČUNAROM

CONTEMPORARY APPROACH OF COMPUTER AIDED DESIGN OF UNIVERSAL RADIOGRAPHY SYSTEM

Miloš Milošević, Srđan Mladenović,
University of Niš, Faculty of mechanical engineering, 18000 Niš, Serbia
Svemir Popić,
Institute Mihajlo Pupin, 11000 Belgrade, Serbia
Goran S. Đorđević,
University of Niš, Faculty of electronic engineering,
Aleksandra Medvedeva 14, P.O. Box 73, 18000 Niš, Serbia

Sadržaj - *Ovaj rad prikazuje savremeni pristup projektovanju jednog medicinskog robota podržan računarom na primeru projektovanja složenog sklopa uređaja univerzalnog radiografskog sistema (URS) korišćenjem programske platforme SolidWorks i njenih funkcionalnih celina, osnovnog CAD modula za virtuelno projektovanje i modeliranje trodimenzionalnih modela, kao i modula SolidWorks Motion Simulation za rešavanje ključnih inženjerskih problema kod analize kinematike i dinamike pokretnih sklopova, odnosno mehanizama za dimenzionisanje aktuatora, utvrđivanje graničnih uslova za naponsku analizu, uticaj dinamičke neuravnoteženosti, prenos opterećenja u uležištenjima ili definisanje putanja pojedinih tačaka.*

Abstract - *This paper presents a contemporary approach of computer aided design of a medical robot on an example of designing a complex assembly of a Universal Radiography System (URS) by using the SolidWorks software platform and its functional units: the basic CAD module for virtual designing and modeling three-dimensional models, and the SolidWorks Motion Simulation module for solving essential engineering problems in the analysis of kinematics and dynamics of moving assemblies and mechanisms for sizing actuators, determining boundary conditions for stress analyses, analyzing the impact of dynamic imbalance, following the load transfer in bearings and defining the path of individual points.*

1. INTRODUCTION

Nowadays, modern robotics in medicine occupies an important place because the concept of robotics is extensively applied to medical devices for surgery, diagnostics and rehabilitation. It is therefore necessary to involve a contemporary approach of computer aided design of medical robots. It is based on developing virtual prototypes and using simulation at different levels of the design process in order to test the functioning of developing devices in real conditions, components stressing and the ability of carrying loads, collision of parts during the movement, sizing of actuators and the final optimization of component parts. This approach affects the acceleration of the design process, timely problem solving, developing of more creative and reliable products, reducing of the cost of the real prototype, potential subsequent prototype modifications, the production process and overall costs and time required to create a new product and to place it on the market. For that purpose, a variety of software packages that integrate in the latest versions functionalities from different designing areas have been used.

The contemporary approach of computer aided design of medical robots include conceptual and functional designing, implementation of control algorithms, modeling of virtual prototypes and the final testing and verification of the chosen solution on a physical prototype. The main objective of the conceptual design is to determine the best conceptual solution of a medical robot under development in the required conditions for its usage by efficient processing of available scientific, technological, economic, market, cultural, legal, political and other information. The functional design involves identifying, modeling and evaluation of operational characteristics of a developing medical robot, as well as deviations from the desired characteristics, or in other words, the relationship in which the designing system should answer to the set of designing requirements.

Researching of the literature has indicated the current problems in developing medical robots. It turned out that for the design of the mechanical structure of a medical robot an integrated approach to modeling of structural, kinematic and dynamic aspects simultaneously has not being applied so far. At the same time, it lacks a generalized approach for the conceptual solving and for the structural synthesis of

mechanisms of medical robots. This has highlighted the need to present a unified approach for modeling moving mechanical assemblies based on the theory of Multi Body Systems – MBS [1, 2, 3]. For the structural synthesis based on the theory of systems with more bodies, the mechanical part of a system is defined as a set of bodies joined by joints that allow them to move rectilinear or rotary, depending on degrees of freedom that are limited or remained free. Therefore, this paper presents a contemporary approach to the design of a medical robot aided by computer on an example of designing a complex assembly of a device called Universal Radiographic System (URS) using the software SolidWorks and its functional units, the basic CAD module for virtual design and modeling of three-dimensional models, as well as the module SolidWorks Motion Simulation for solving the most important engineering problems in the analysis of kinematics and dynamics of moving assemblies, i.e. mechanisms, sizing actuators, determining boundary conditions for stress analysis, determination of the dynamic imbalance impact, analyzing of load transfers in bearings and defining the path of individual points.

2. DESIGN PROCESS

In general, the analysis of mechanisms of the designed assembly of URS includes the development of the three specific mechanical models: kinematic, inverse dynamic and dynamic [4]. The kinematic model of the mechanism includes rigid members that are connected by defining the geometric restrictions of movement, that is, by subtracting the appropriate degrees of freedom of movement in certain joints and specific geometric parameters that define the structure of the mechanism. In this case, kinematic relations that control the movement of drive elements, usually angular or linear displacements, are used as input parameters of moving. The objective of the kinematic analysis is to determine the possible relative motion between the components of the mechanism, as well as the movement in space of the entire system, which monitors mutual collisions of members and the possibility of achieving the necessary paths of driven members. The inverse dynamic model consists of a kinematic model that is expanded by external and internal forces and moments. Basically, this model takes into account forces of gravity that depend on geometry and material properties defined for each movable body, reactions in joints and the friction force. Also, if it is necessary, this model can be subsequently loaded by external factors. This model is used for determining torque and/or forces that are necessary to be generated by drives for performing the required movement. For the final inspection of the real behavior of the virtual model it is used the dynamic model based on the inverse dynamic model in which, as the input parameters, the predetermined drive torque and/or force parameters are used.

Significant experiences related to the importance of using virtual prototypes in the design phase of products, as well as increasing usage of methods related to the analysis of MBS are subjects of many published papers [5, 6, 7, 8], in order to influence the acceleration of the designing process of modern devices, timely problem solving, developing more creative and reliable products, reducing the cost of subsequent modifications of the real prototype and the production process flow and reduce overall costs and time required to

Modeling and analysis of mechanisms of the universal radiographic system assembly by using MBS method involve the following steps [4]: defining of the universal radiographic system assembly as a multi-body system; determination of coordinate systems of used bodies, defining a geometric model of the whole system, setting up a system of equations describing geometrical and kinematic constraints, formulation of differential equations of motion, assigning material characteristics of the bodies (masses and moments of inertia); determining reaction forces and moments, calculation of algebraic and differential systems of equations describing the dynamic behavior and so on.

In recent years, with the development of powerful computer hardware solutions, a new approach to the analysis of virtual prototypes of mechanical assemblies of moving parts is significantly developed by the application of the model of MBS. This approach is reflected in forming of the detailed model and its usage in virtual experiments, in a similar way as it would be in the case in the reality with the physical prototype. However, in this case it is no longer necessary to wait for months to create a physical prototype that would be subjected to tests and later processing and expensive repairs with the final aim of achieving the desired characteristics [9]. At its core, the proposed contemporary approach of computer aided design includes the usage of virtual prototyping softwares for CAD, MBS and FEA [10]. The CAD environment is used to create a geometric model of the system that contains information on the mass and moments of inertia of rigid members. The MBS software, which is the central component of the virtual prototyping platform, is used for analysis, optimization and simulation of kinematic and dynamic parameters of the mechanical part of the system. The FEA solutions are used to model elastic components. In that way the impact of the effect of elasticity is taken into account during the simulation in order to predict the final results with higher accuracy, as well as stress determining of the most critical parts and their ability to withstand loads with the final aim of optimization of the total mass of the constituent components.

3. COMPUTER AIDED DESIGN OF UNIVERSAL RADIOGRAPHY SYSTEM

In order to perform analysis and simulation of mechanical operations of motorized assemblies, as well as determining factors such as power consumption and collisions between moving parts, the modern software packages are used to help in determining whether an assembly is suitable to withstand the design loads, some parts will be broken under certain circumstances, and what will be in the case of the failure with the final safety of the device. For these types of simulations and analyses the SolidWorks Motion Simulation module is used, which is, as a functional unit, located within the SolidWorks software platform. Within this module the motion can be analyzed as a motion with constant moving, constant speed or constant acceleration. In such way, moving, speed or acceleration of the individual members of the model are developed as a simultaneous function of time. Furthermore, reaction forces/torques can be defined by this module in each joint, and also it can help in dimensioning of springs and shock absorbers that are necessary for the proper mechanisms functioning. In order to determine the necessary forces which are able to overcome the movement resistance

the real parameters of the geometry and masses of parts, as well as the friction in the contacts are taken into account. Finally, the SolidWorks Motion Simulation is used for actuators dimensioning that are needed to drive moving parts of mechanisms of complex moving assemblies [11].

.

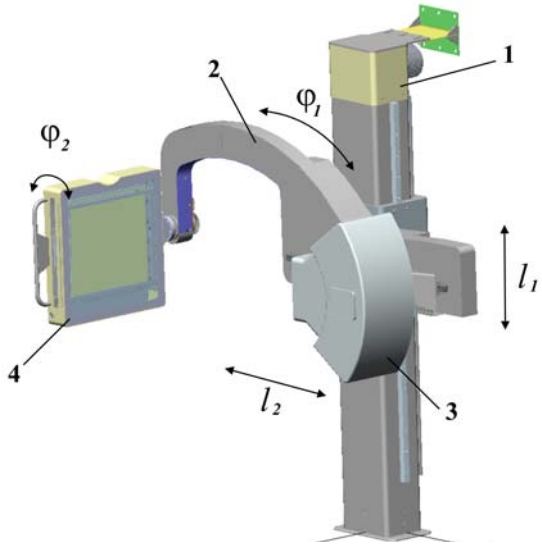

Fig. 1. The universal radiographic system assembly

The mechanical part of the universal radiographic system assembly (Fig. 1) consists of two parts, an immobile part - the column (1) and a moving part - the hand assembly (2). The arm assembly can make two movements. It can rotate around the turntable (φ_1), which is attached to a zone, and go linear up and down (l_1). This assembly represents a complex entity composed of several sub-assemblies. It has two additional mobile subassemblies: a subassembly with the radiation source (3) that rotates around its axis (φ_2) and a subassembly with a device for receiving x-rays (4) that moves along linear guides (l_2).

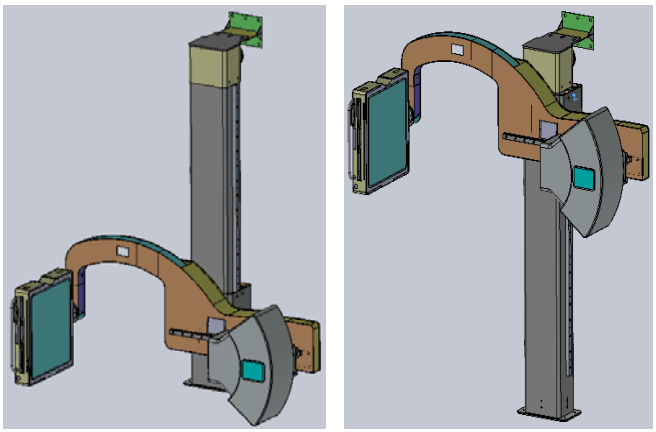

Fig. 2. The analysis of the arm assembly linear motion

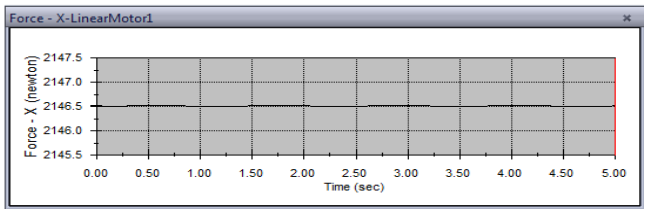

Fig. 3. The force diagram of the arm assembly linear motion

First, the linear motion of the arm assembly (Fig. 2) up and down along the immovable column was done in order to determine the force required to overcome movement resistance forces. The construction of the arm assembly is attached to a zone to which six pairs of roller bearings (connected to the inside of the zone) are attached which allow linear up and down motion of the arm assembly. The movement is achieved along the guides that are attached to the sides and the rear part of the column. The force of the linear drive directed in the direction of the linear guide obtained by analyzing the movement of the arm assembly is shown by the diagram in Fig. 3. The movement of the arm assembly structure is limited by the length of the linear guide to 1800mm.

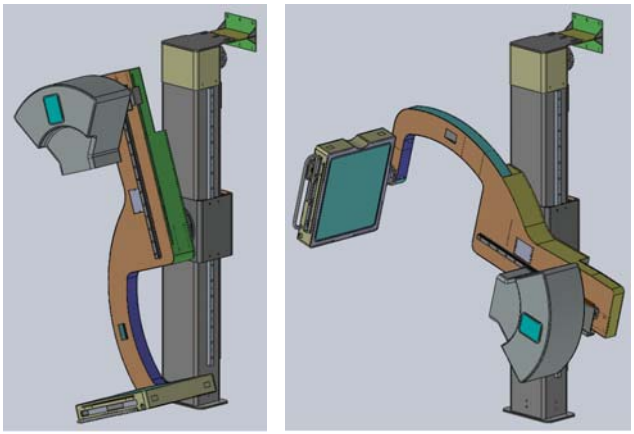

Fig. 4. The analysis of the arm assembly rotation

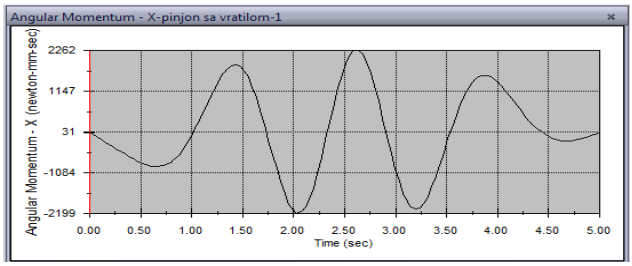

Fig. 5. The torque diagram of the arm assembly rotation

During the analysis of the arm assembly rotation around the revolving platform (Fig. 4) the torque needed to move the arm from one to the other end position was determined. To this end, the arm assembly was firstly brought to the vertical position, and then the whole construction of the arm was rotated for 30° in the positive mathematical direction. After achieving the initial position, the analysis was done for the rotation of the construction of the arm for 150° in the negative mathematical direction. The whole rotation of the arm assembly was 180°. The measured torque of the drive on the revolving platform is shown by the diagram in Fig. 5.

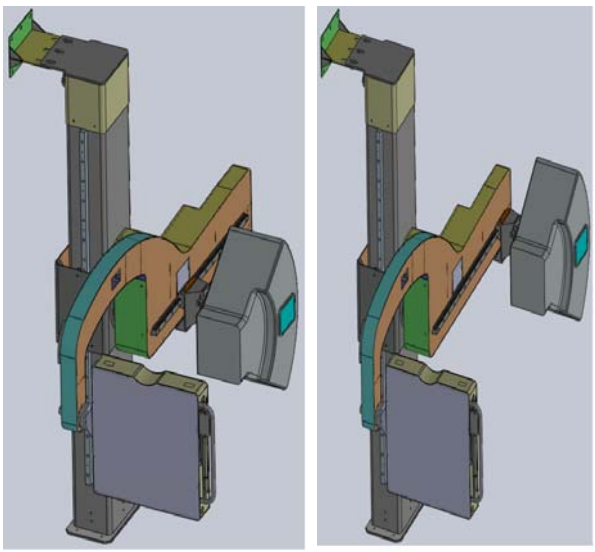

Fig. 6. The analysis of the radiation source subassembly linear motion (horizontal position)

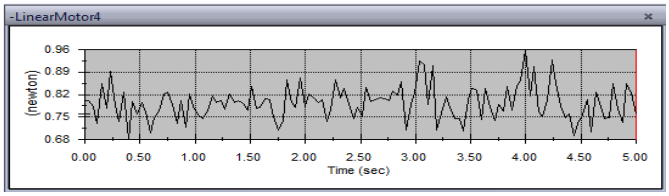

Fig. 7. The force diagram of the radiation source subassembly linear motion (horizontal position)

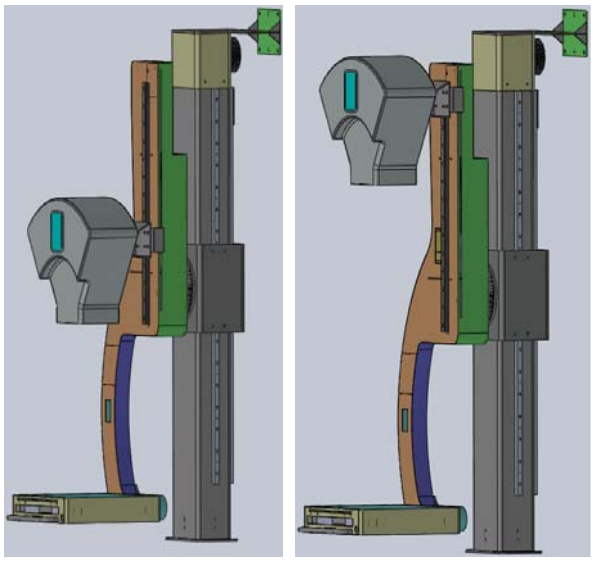

Fig. 8. The analysis of the radiation source subassembly linear motion (vertical position)

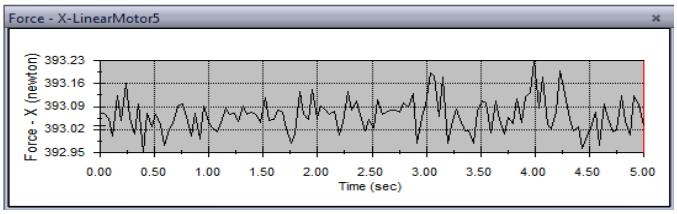

Fig. 9. The force diagram of the radiation source subassembly linear motion (vertical horizontal position)

For the analysis of the force required to move the radiation source subassembly linearly along the guides of the arm assembly, the construction of the arm assembly was fixed in two positions, horizontal (Fig. 6) and vertical (Fig. 8). In those positions, the radiation source subassembly was moved from one to the other end position. The driving force of the linear actuator mounted in the direction of the guides needed to perform the movement was much greater when the arm assembly was in the vertical position (Fig. 9), comparing to the driving force for the horizontal position which was less (Fig. 7). The movement of the radiation source subassembly is limited by the length of the guides to 1098mm.

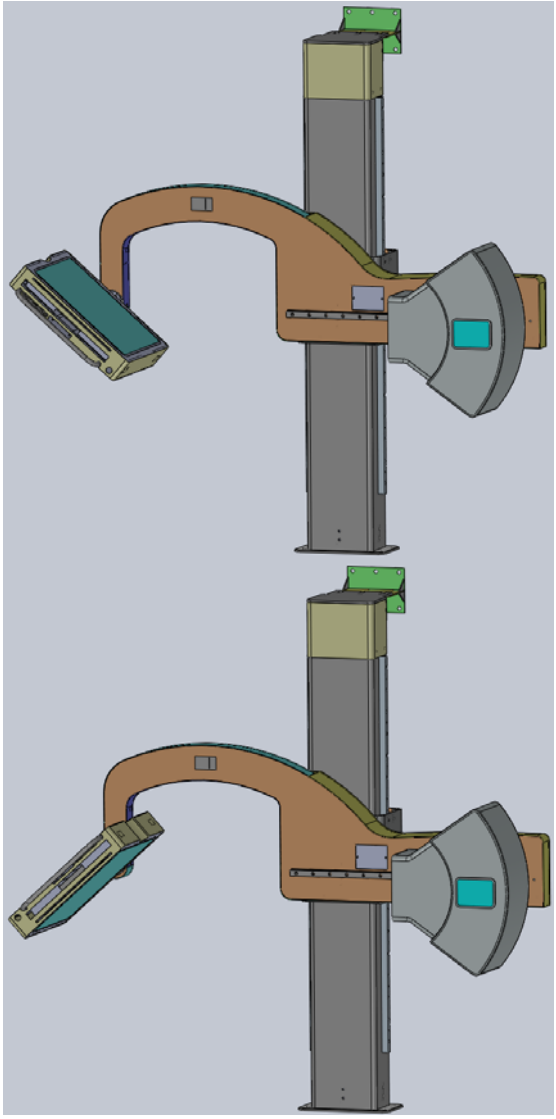

Fig. 10. The analysis of the radiation sink subassembly rotation

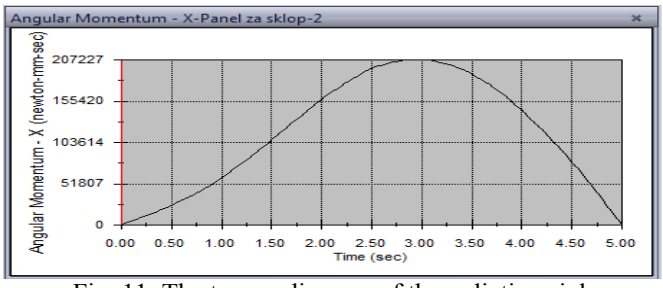

Fig. 11. The torque diagram of the radiation sink subassembly rotation

Finally, the analysis of the radiation sink subassembly rotation around its axis (Fig. 10) was done. The rotation of this subassembly is limited to ±45° relative to its initial position, for which the direction of the guides of the arm assembly is taken. The diagram in Fig. 11 shows the torque of the actuator mounted on the axis of radiation sink subassembly rotation.

A prototype of the complex assembly of URS, shown in Fig. 11, has made after the successful implementation of the described contemporary approach of computer aided design of medical robots. This prototype will be further used to check the results of the maximal forces and torques for driving moving parts of the URS assembly obtained by analysis and simulation of the three-dimensional model in the SolidWorks Motion Simulation module, that were used for sizing the drivers of the prototype.

Fig. 11. The prototype of the Universal Radiography System prototype (Courtesy VeD X-ray AD, Niš, Serbia)

4. CONCLUSIONS

The presented example of the successful application of the contemporary approach of computer aided design of a medical robot on an example of designing a complex assembly of a Universal Radiography System (URS) by using the SolidWorks software platform and its functional units represents a typical application of virtual prototypes. One of the main advantages of this type of designing is the ability to perform virtual measurements at any point or field for any parameter (position, velocity, acceleration, force, torque, and so on). These are not always possible in real, physical models due to lack of sufficient space for transducers mounting, or the lack of appropriate measuring equipment. Also, this approach helps to make quick decisions regarding any changes in the structure of the system without any additional costs or subsequent tests. During simulations of virtual prototypes the final prediction of the dynamic behavior of the final product can be achieved much earlier than with traditional design approaches, which can result in more efficient and economical design solutions. This contemporary approach to the analysis of virtual prototypes of mechanical assemblies with moving parts by the application of the model based on the theory of Multi Body Systems – MBS brings several significant advantages: reducing development time and costs of a new product by reducing the number of developing steps during the design process, reducing the number of expensive physical prototypes and tests on them, as well as improving quality and efficiency of fully improved products.

ACKNOWLEDGEMENT

This paper is supported in part by the Project Grant III44004 (2011-2014) financed by Ministry of Education and Science Republic of Serbia.

REFERENCES

[1] Garcia de Jalón, J., Bayo, E., *Kinematic and Dynamic Simulation of Multibody Systems,* Springer-Verlag, New York, 1994.

[2] Schiehlen, W.O., *Multibody Systems Dynamics: Roots & Perspective,* Multibody Systems Dynamics, Vol. 1 (2), 1997.

[3] Vişa, I., Comşiţ, M., *Design of the Linkages-type Tracking Mechanisms by using MBS Method,* Proceedings of 12-th IFToMM World Congress, Besançon, 2007.

[4] Alexandru, C., Pozna, C., *Dynamics of Mechanical Systems using Virtual Prototyping Tools*, Transilvania University Publisher, Braşov, 2003.

[5] Haug, E.J., *Computer Aided Kinematics and Dynamics of Mechanical Systems*, Allyn and Bacon, 1989.

[6] Haug, E. J., *Virtual Prototyping Simulation for Design of Mechanical Systems*, Transaction ASME, no. 117, 1995.

[7] Schiehlen, W.O., *Advanced Multibody Systems Dynamics*, Kluwer Academic, 1993.

[8] Shabana, A., *Dynamics of Multibody Systems*, John Wiley & Sons, 1988.

[9] Ryan, R., *Functional Virtual Prototyping*, Mechanical Dynamics Inc., 2001.

[10] Milošević, M., *Software Integration for Mechanical Systems Analysing*, Verein Deutscher Ingenieure, TU Ilmenau, Germany, 2003.

[11] Milošević, M., Mladenović, S., Popić, S., Đorđević, G., *Primena savremenih CAE alata u inicijalnim fazama projektovanja konstrukcije i dimenzionisanja pogona medicinskih robota*, Zbornik radova INFOTEH JAHORINA, Jahorina, BiH, 2009.